DRIVEWAY / ALLEY APPROACH FOR CURBSIDE SIDEWALK

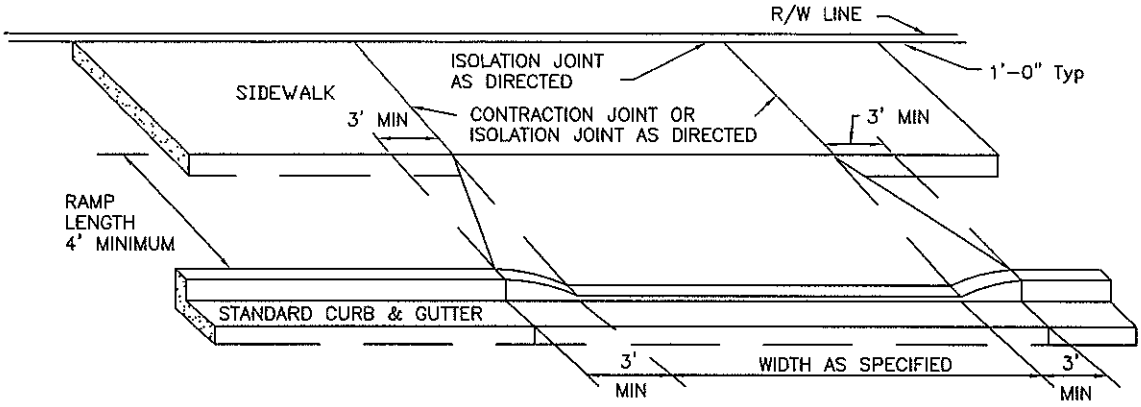

DRIVEWAY / ALLEY APPROACH FOR SET-BACK SIDEWALK

NOTES:

1) ALL DRIVEWAYS AND SIDEWALK SECTIONS THROUGH DRIVEWAYS SHALL HAVE A NOMINAL THICKNESS OF SIX INCHES OF CONCRETE

2) ROLLED SECTIONS BETWEEN FULL CURB HEIGHT AND DRIVEWAY SHALL BE THREE FEET MINIMUM. USE LONGER TRANSITIONS FOR COMMERCIAL APPROACHES.

3) CONCRETE SHALL HAVE A 28 DAY ULTIMATE COMPRESSIVE STRENGTH OF – 3300 PSI MINIMUM.

4) DEPENDING ON THE WIDTH OF THE DRIVEWAY OR ALLEY APPROACH, CONSTRUCT ONE OR MORE CONTRACTION JOINTS.

City of McMinnville

DETAIL FOR RESIDENTIAL DRIVEWAY

DATE:	DRAWING NO.
AUGUST 2009	3

G:\DWGS\StdDwgs\3_Detail_for_driveway.dwg

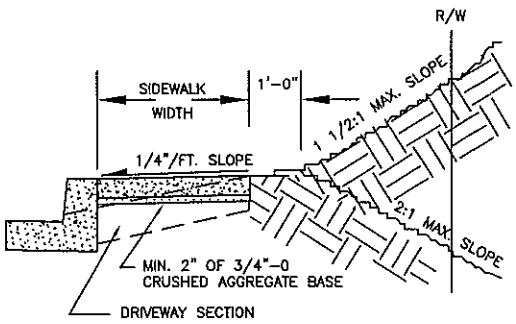

TYPICAL CURB TYPE CROSS SECTION

NOTES:

1) STANDARD SIDEWALK CROSS SLOPE SHALL BE 1/4"/FOOT.

2) CONCRETE DEPTH FOR STANDARD SIDEWALKS SHALL BE NOMINAL 4" MIN. DRIVEWAY SECTIONS INCLUDING SIDEWALKS THROUGH DRIVEWAYS SHALL BE NOMINAL 6" MIN.

3) EXPANSION JOINTS WITH PREMOLDED FILLER SHALL BE INSTALLED BETWEEN DRIVEWAYS AND SIDEWALK AT THE DIRECTION OF THE ENGINEER. (SEE DRIVEWAY DETAILS) CONTRACTION JOINTS SHALL BE INSTALLED AT APPROXIMATE INTERVALS OF 15 FEET BY CUTTING AT LEAST 1/3 OF THE DEPTH OF THE CONCRETE. "DUMMY" JOINTS SHALL BE INSTALLED AT APPROXIMATE INTERVALS OF 5 FEET.

4) INSTALL A BOND BREAKER OR ISOLATION JOINT BETWEEN BACK OF CURB AND SIDEWALK, AND AROUND ANY OBSTRUCTION WITHIN SIDEWALK AREA.

5) SEE STANDARD WHEEL CHAIR/BICYCLE RAMP DETAILS FOR SIDEWALK PATTERNS AT INTERSECTION CURB RETURNS.

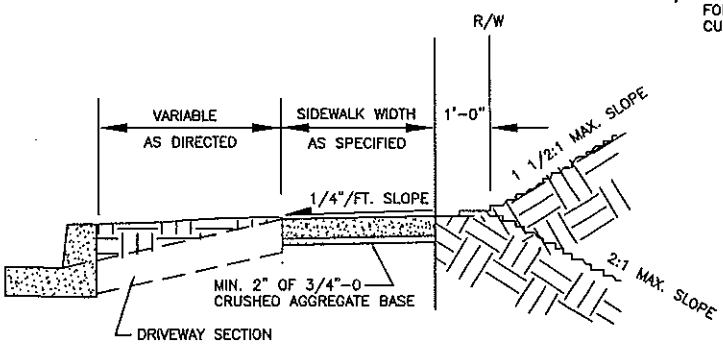

TYPICAL SETBACK TYPE CROSS SECTION

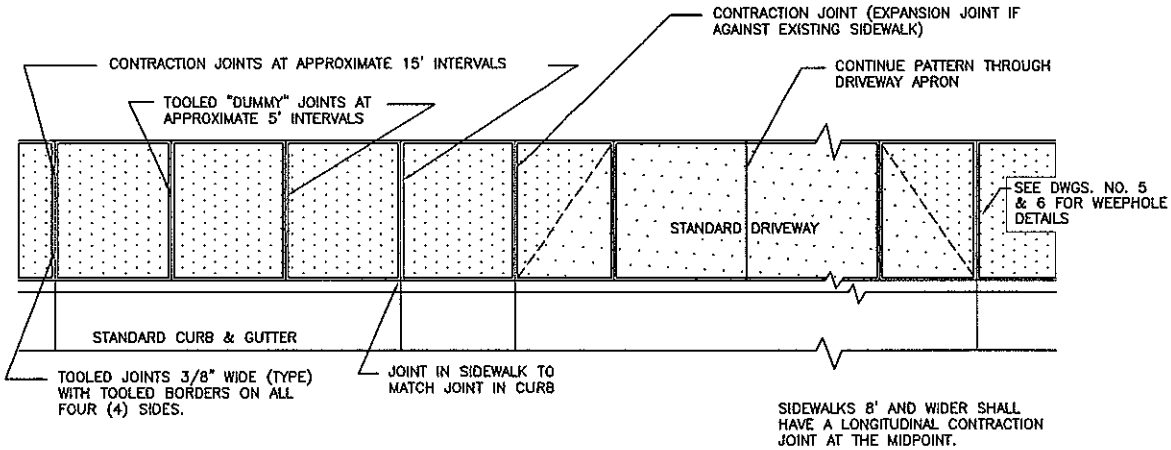

TYPICAL PLAN VIEW

City of McMinnville

DETAIL FOR SIDEWALK

DATE:	DRAWING NO.
AUGUST 2009	4

G:\DWGS\StdDwgs\4_Detail_for_sidewalk.dwg

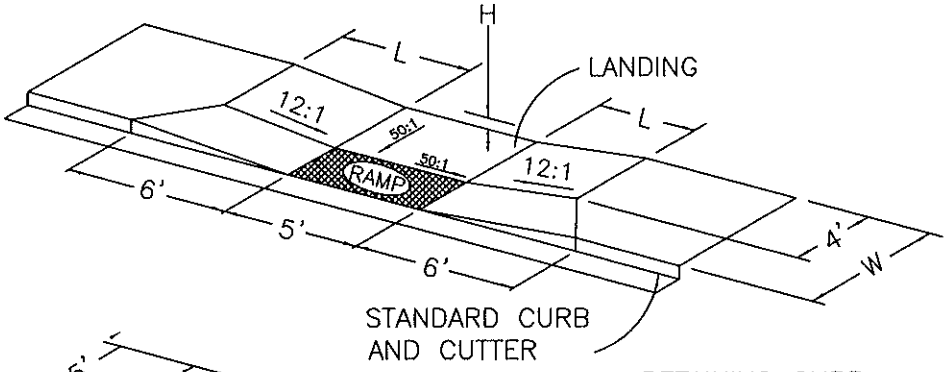

W	L	H
5'	4.25'	7/16"
5.5'	3.75'	13/32"
6'	3.73'	3/8"
6.5'	3.41'	11/32"
7.0'	3.10'	5/16"
7.5'	2.78'	9/32"
8.0'	2.46'	1/4"
8.5'	2.15'	7/32"
9.0'	1.83'	3/16"
9.5'	1.51'	5/32"
10'	1.20'	1/8"
10.5'	0.78'	3/32"

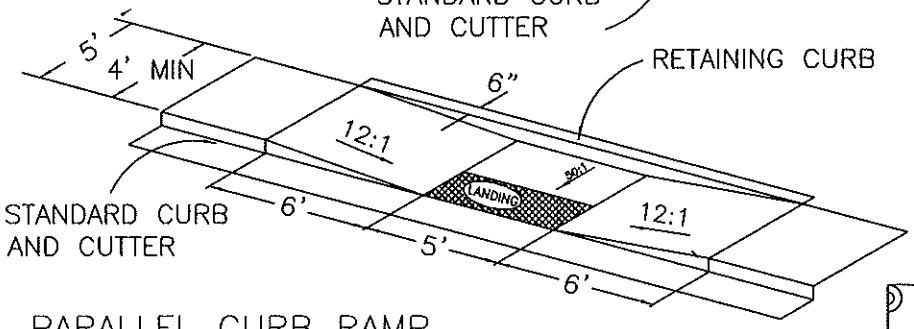

PARALLEL CURB RAMP

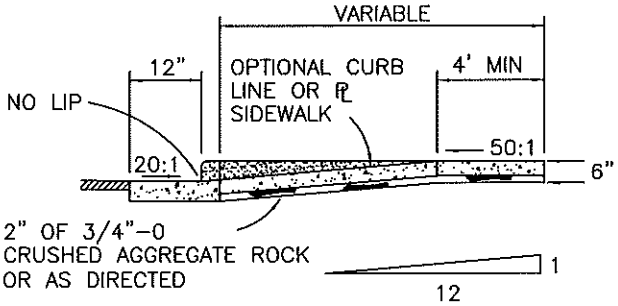

TYP. SECTION THROUGH DETAIL

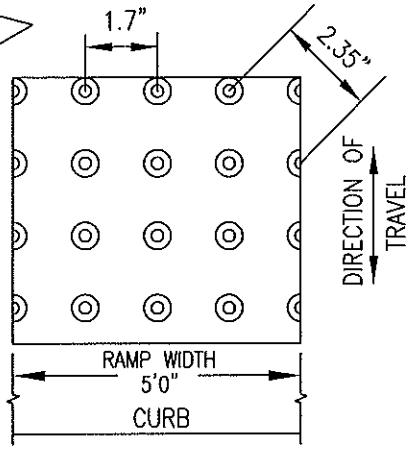

RAMP TEXTURE DETAIL

NOTES:

1. THE "AMERICANS WITH DISABILITIES ACT" REQUIRES THAT ACCESS RAMPS TO SIDEWALKS CONFORM TO ALL FEDERAL GUIDELINES. EXCEPTIONS TO THE REQUIREMENTS IN THIS DRAWING MUST BE APPROVED BY THE ENGINEER AND MUST COMPLY WITH ADA.
2. NO ABOVE GROUND UTILITIES ARE PERMITTED WITHIN RAMP AREA.
3. LANDINGS SHALL BE PLACED AT THE TOP OF EACH RAMP. LANDING SLOPES SHALL NOT EXCEED 50:1 IN ANY DIRECTION. 5% SLOPED LANDING (MAX.) SHALL BE PLACED AT THE BOTTOM OF EACH RAMP.
4. PLACE TRUNCATED DOME DETECTABLE WARNING TEXTURE IN THE LOWER 24" OF THE THROAT OF THE RAMP ONLY. ARRANGE DOMES USING IN-LINE PATTERN ONLY AS SHOWN IN DETAIL. COLOR OF TEXTURE TO BE SAFETY YELLOW. FOR CONSTRUCTION OF SIDEWALK RAMPS OUTSIDE OF PUBLIC RIGHT-OF-WAY, CHECK WITH BUILDING CODES.
5. MINIMUM LANDING DIMENSIONS SHALL BE 4' x 4'.
6. CONCRETE STRENGTH SHALL BE 3300 PSI.

City of McMinnville

DETAIL FOR
PARALLEL
SIDEWALK RAMP

DATE: AUGUST 2009

DRAWING NO. 2

G:\DWGS\StdDwgs\2_Detail_for_parallel_sidewalk_ramp.dwg

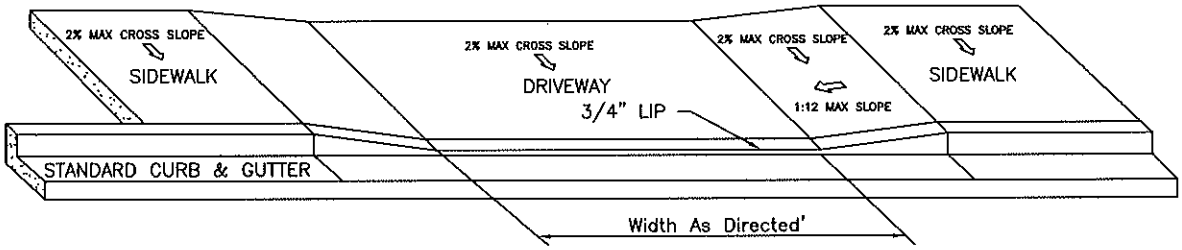

FULLY LOWERED ADA DRIVEWAY APPROACH FOR CURBSIDE SIDEWALKS

NOTES:

1) ALL RESIDENTIAL DRIVEWAYS AND SIDEWALK SECTIONS THROUGH DRIVEWAYS SHALL HAVE A NOMINAL THICKNESS OF SIX INCHES OF CONCRETE
2) ALL COMMERCIAL\INDUSTRIAL DRIVEWAYS SHALL INCLUDE REBAR OR HAVE THICKNESS INCREASED TO A NOMINAL THICKNESS OF EIGHT INCHES OF CONCRETE
3) CONCRETE SHALL HAVE A 28 DAY ULTIMATE COMPRESSIVE STRENGTH OF – 3300 PSI MINIMUM.
4) DEPENDING ON THE WIDTH OF THE DRIVEWAY OR ALLEY APPROACH, CONSTRUCT ONE OR MORE CONTRACTION JOINTS.

City of McMinnville

FULLY LOWERED ADA DRIVEWAY APPROACH

DATE:	DRAWING NO.
APRIL 2011	33

G:\DWGS\StdDwgs\3_Detail_for_driveway.dwg