USE 7 – #3 HOOK BARS @6" C.C. VERT. & 3 – #5 BARS HORIZ. IN CURB AS SHOWN.

NOTES:

1. CONCRETE SHALL BE CLASS 3000.
2. USE FRAME AND GRATE DETAILS FROM STANDARD DRAWINS FOR CATCH BASIN.

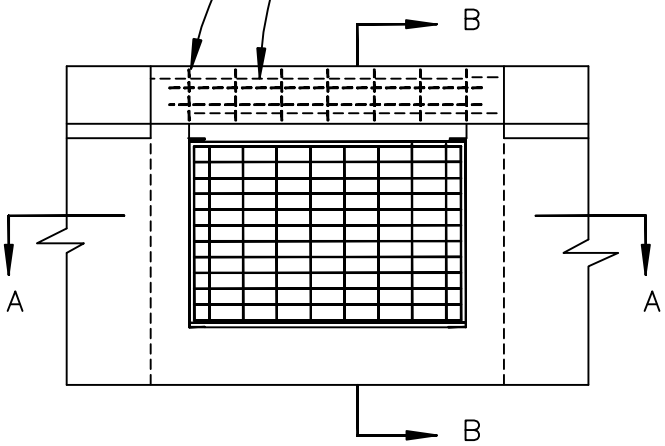

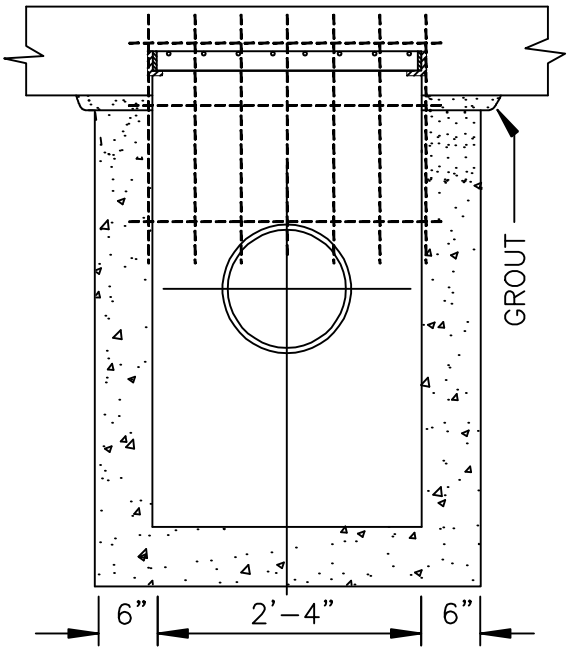

SECTION A–A

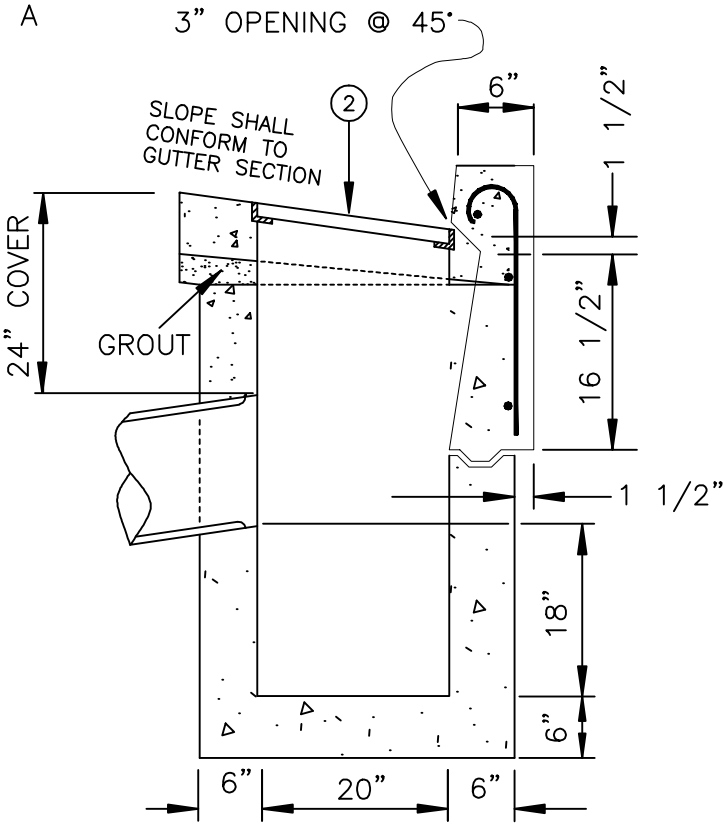

SECTION B–B

City of McMinnville

DETAIL FOR COMBINATION GUTTER AND CURB INLET CATCH BASIN

DATE:	DRAWING NO.
AUGUST 2009	11

G:\DWGS\StdDwgs\11_Detail_for_combination_gutter_and_curb_inlet_catch_basin.dw