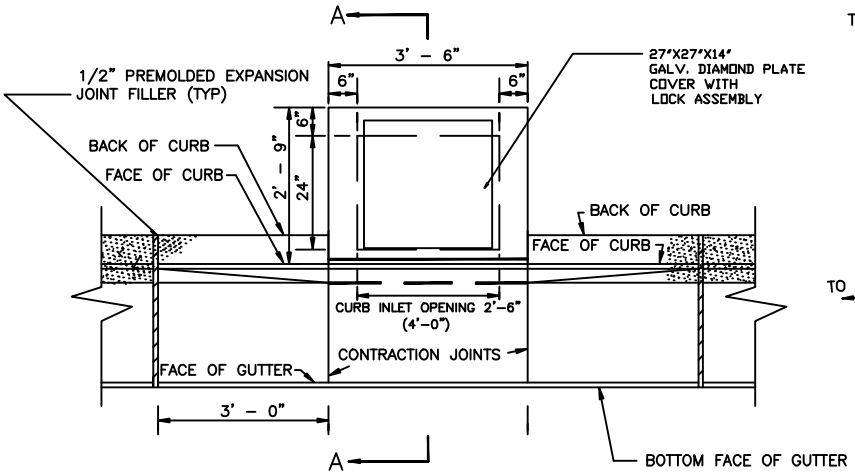

PLAN VIEW

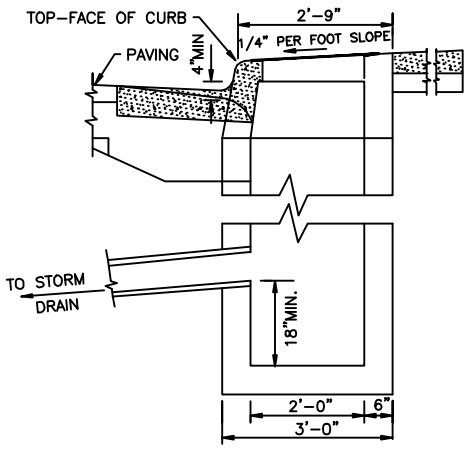

SECTION A–A

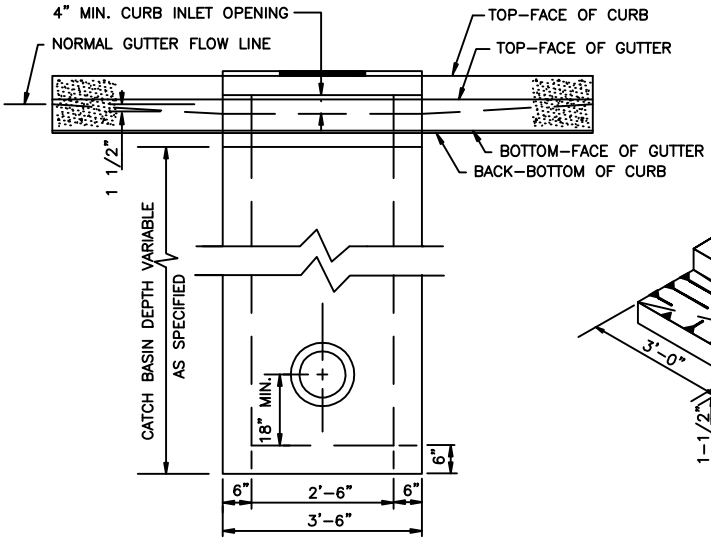

FRONT VIEW

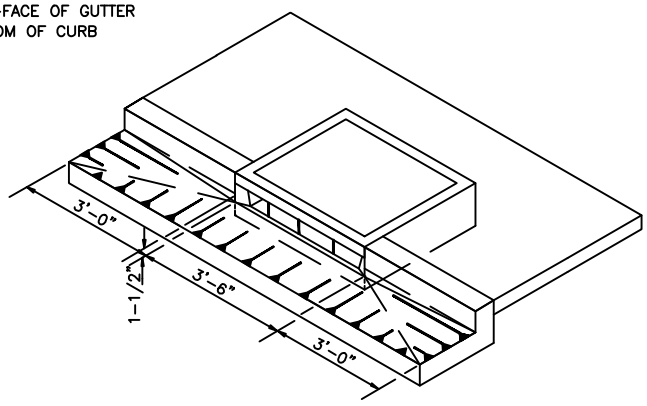

PERSPECTIVE VIEW SHOWING DEPRESSED GUTTER AT CURB INLET

NOTES:

1) ALL FABRICATED METAL PARTS SHALL BE HOT–DIPPED GALVANIZED AFTER FABRICATION.

2) CONCRETE SHALL ATTAIN A MIN. COMPRESSIVE STRENGTH OF 3000 P.S.I. IN 28 DAYS.

3) FOR STEEP GRADES USE STD. PRECAST INLET WITH 4'–0" OPENING OR TWO 2'–6" OPENING INLETS.

4) PRECAST CURB INLET IS PATTERNED AFTER WALT'S CONCRETE, SPRINGFIELD, OR. CONCRETE CURB INLET PAT. NO. 4000953.

City of McMinnville

DETAIL FOR GUTTER INLET

DATE:	DRAWING NO.
AUGUST 2009	12

G:\DWGS\StdDwgs\12_Detail_for_gutter_inlet.dwg